DELTA

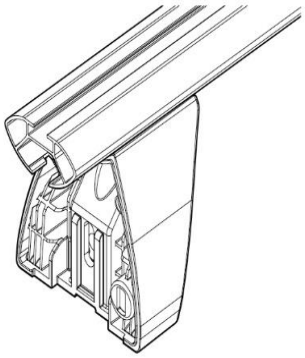

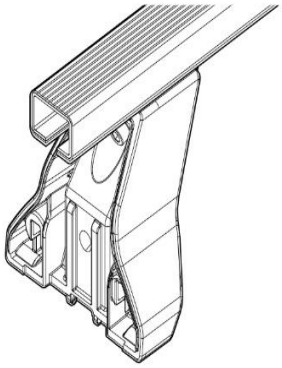

OMEGA

PAG. 4

FIXING KIT DELTA

1

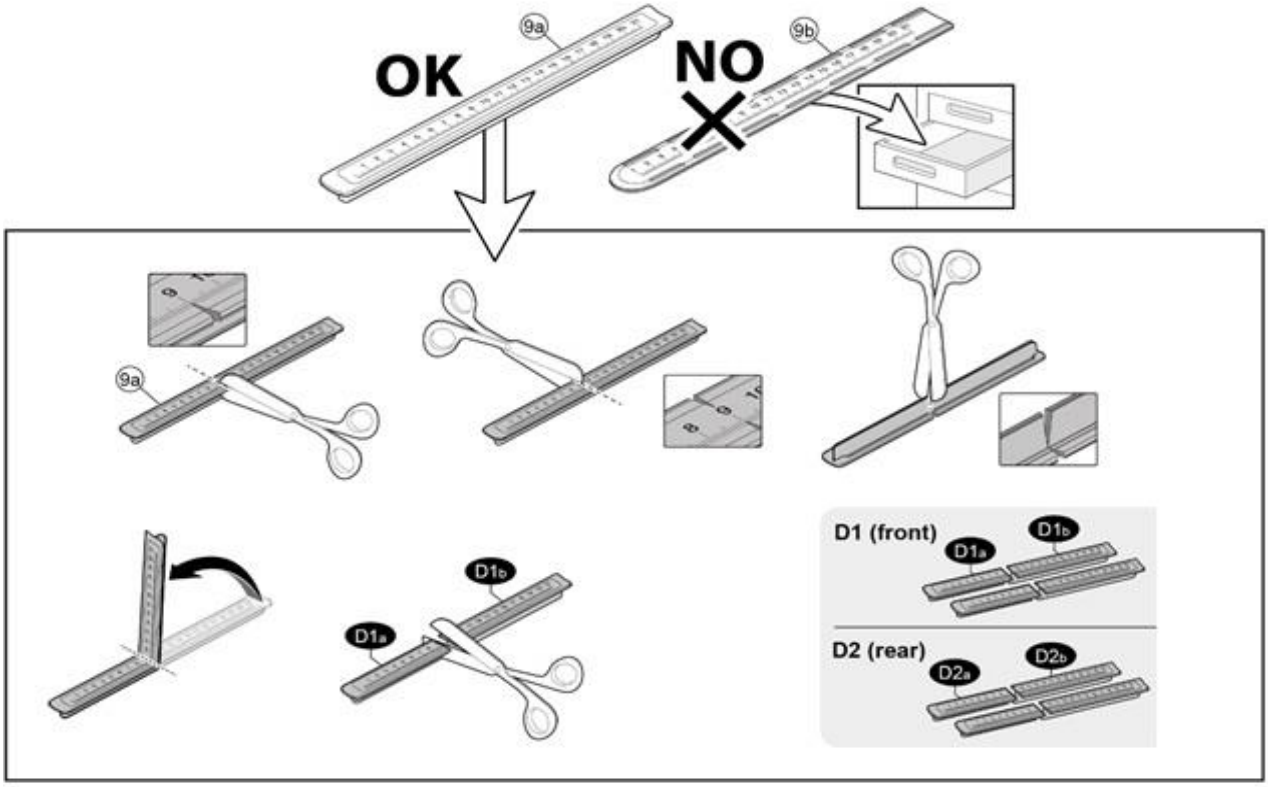

MANUFACTURER	MODEL CAR	DOORS	MODEL YEAR	D1	D2
AUDI	*A4 (B8/8K)*	*4*	*12>15*	*5,2*	*4,5*
FORD	*Escape III (C520)*	*5*	*13>19*	*5,4*	*9,1*
HONDA	*Jazz / Fit (GR)*	*5*	*20>*	*5,1*	*3,4*
LEXUS	*GS (L10)*	*4*	*11>*	*5,3*	*5,3*
SEAT	*Córdoba II*	*4*	*02>09*	*8,5*	*8,5*
SEAT	*Ibiza III*	*5*	*02>09*	*8,5*	*8,5*
SKODA	*Superb (3T)*	*4*	*08>13*	*5,6*	*5,9*
VOLKSWAGEN	*Golf V (1K)*	*5*	*03>08*	*5,5*	*3,1*
VOLKSWAGEN	*Golf VI (5K)*	*5*	*08>12*	*5,5*	*3,1*
VOLKSWAGEN	*Polo V (6R/6C)*	*5*	*09>17*	*13,0*	*11,1*
VOLKSWAGEN	*Touran I (1T)*	*5*	*03>10*	*12,2*	*10,1*
VOLKSWAGEN	*Touran I (1T)*	*5*	*10>15*	*12,2*	*10,1*

2

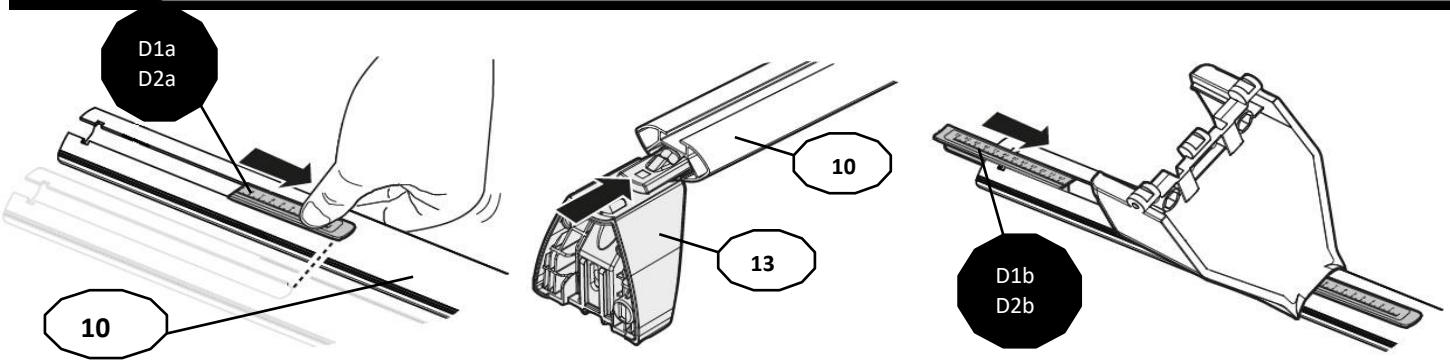

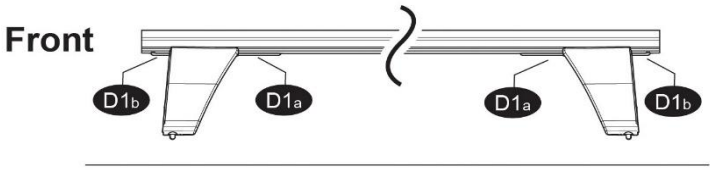

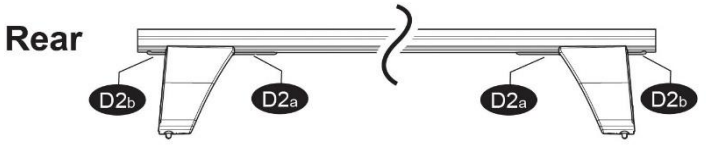

3

x4

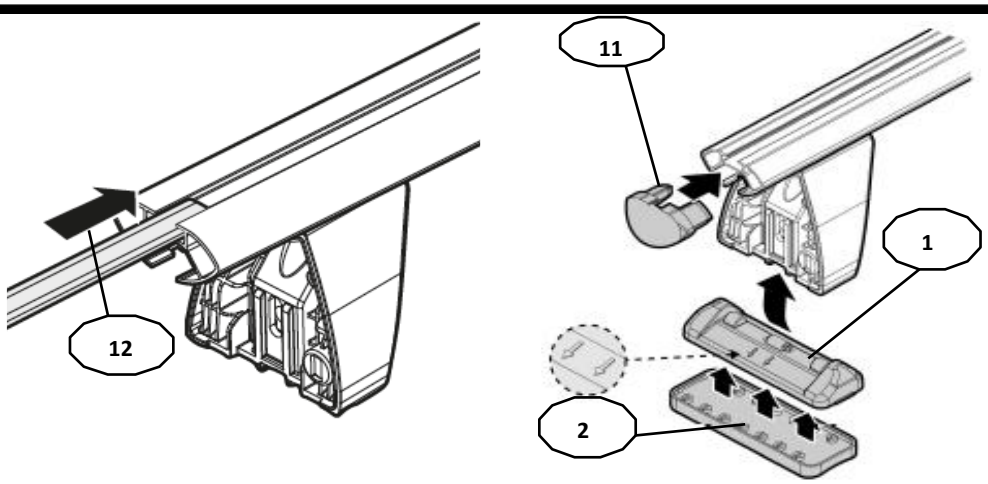

4

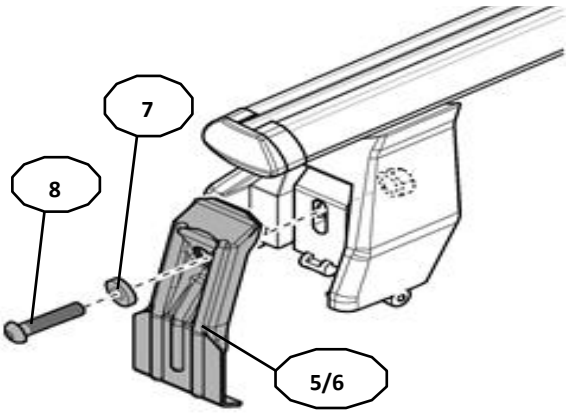

Front	Rear
5	6

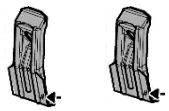

40	40
2X	2X

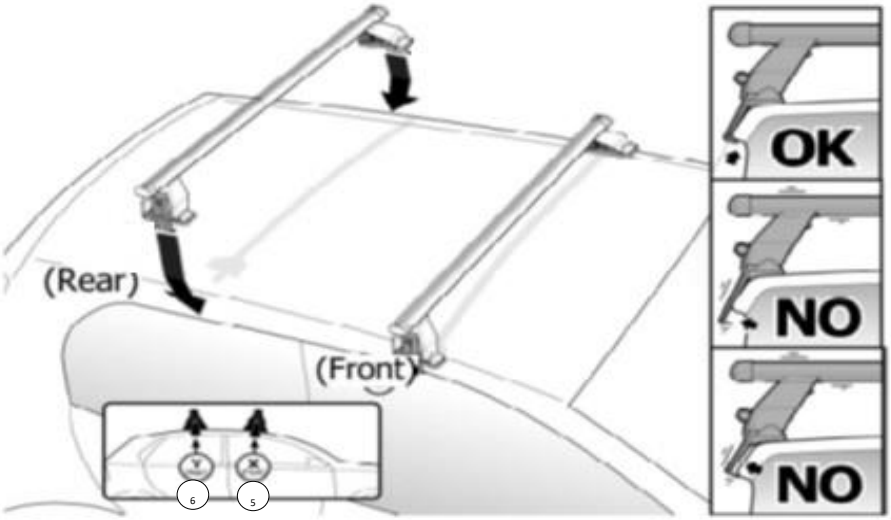

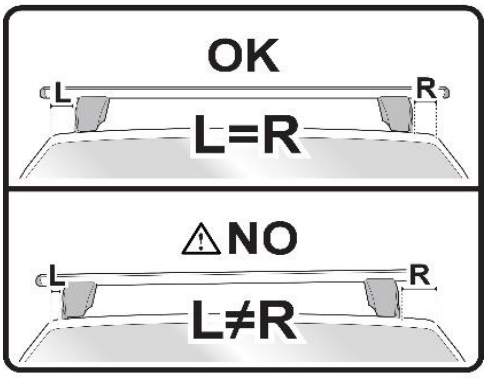

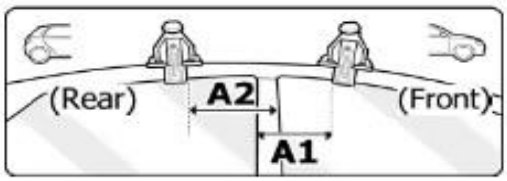

OR

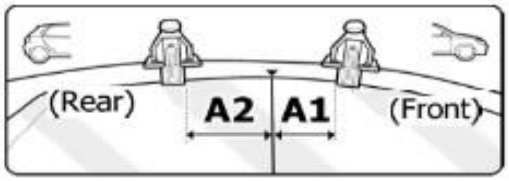

MANUFACTURER	MODEL CAR	DOORS	MODEL YEAR	A1 cm	A2 cm	A1 in	A2 in
AUDI	*A4 (B8/8K)*	*4*	*12>15*	*X*	*X*	*X*	*X*
FORD	*Escape III (C520)*	*5*	*13>19*	*15*	*55*	*5,9*	*21,7*
HONDA	*Jazz / Fit (GR)*	*5*	*20>*	*18*	*42*	*7,1*	*16,5*
LEXUS	*GS (L10)*	*4*	*11>*	*27*	*37*	*10,6*	*14,6*
SEAT	*Córdoba II*	*4*	*02>09*	*25*	*32*	*9,8*	*12,6*
SEAT	*Ibiza III*	*5*	*02>09*	*25*	*32*	*9,8*	*12,6*
SKODA	*Superb (3T)*	*4*	*08>13*	*24*	*50*	*9,4*	*19,7*
VOLKSWAGEN	*Golf V (1K)*	*5*	*03>08*	*33*	*36*	*13,0*	*14,2*
VOLKSWAGEN	*Golf VI (5K)*	*5*	*08>12*	*33*	*36*	*13,0*	*14,2*
VOLKSWAGEN	*Polo V (6R/6C)*	*5*	*09>17*	*35*	*35*	*13,8*	*13,8*
VOLKSWAGEN	*Touran I (1T)*	*5*	*03>10*	*28*	*60*	*11,0*	*23,6*
VOLKSWAGEN	*Touran I (1T)*	*5*	*10>15*	*28*	*60*	*11,0*	*23,6*

X = predisposizione originale /original arrangement

5

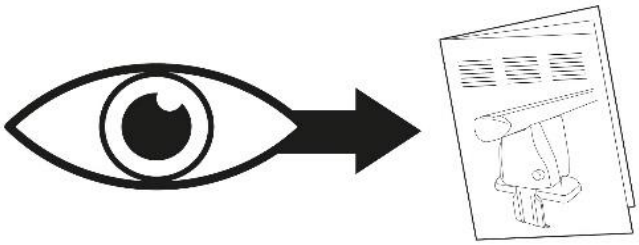

MANUAL DELTA

FIXING KIT OMEGA

2

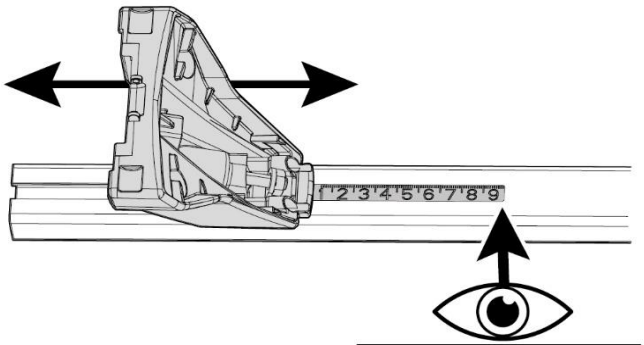

D1 (Front)	D2 (Rear)
xxx	xxx

MANUFACTURER	MODEL CAR	DOORS	MODEL YEAR	D1	D2
AUDI	*A4 (B8/8K)*	*4*	*12>15*	*5,2*	*4,5*
FORD	*Escape III (C520)*	*5*	*13>19*	*5,4*	*9,1*
HONDA	*Jazz / Fit (GR)*	*5*	*20>*	*5,1*	*3,4*
LEXUS	*GS (L10)*	*4*	*11>*	*5,3*	*5,3*
SEAT	*Córdoba II*	*4*	*02>09*	*8,5*	*8,5*
SEAT	*Ibiza III*	*5*	*02>09*	*8,5*	*8,5*
SKODA	*Superb (3T)*	*4*	*08>13*	*5,6*	*5,9*
VOLKSWAGEN	*Golf V (1K)*	*5*	*03>08*	*5,5*	*3,1*
VOLKSWAGEN	*Golf VI (5K)*	*5*	*08>12*	*5,5*	*3,1*
VOLKSWAGEN	*Polo V (6R/6C)*	*5*	*09>17*	*13,0*	*11,1*
VOLKSWAGEN	*Touran I (1T)*	*5*	*03>10*	*12,2*	*10,1*
VOLKSWAGEN	*Touran I (1T)*	*5*	*10>15*	*12,2*	*10,1*

3

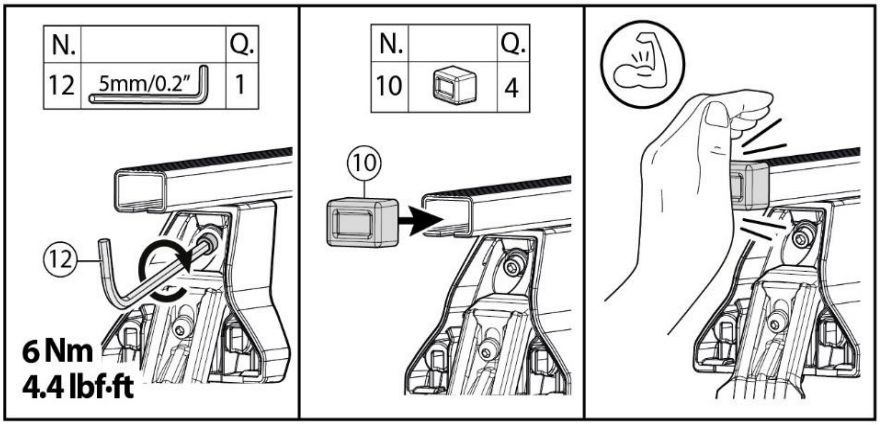

4

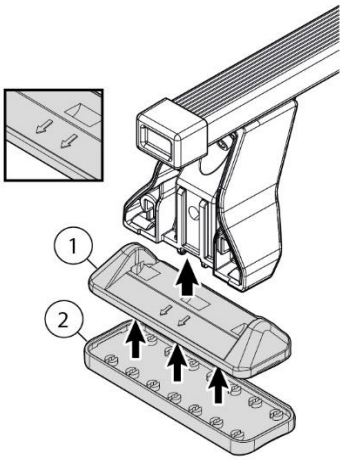

5

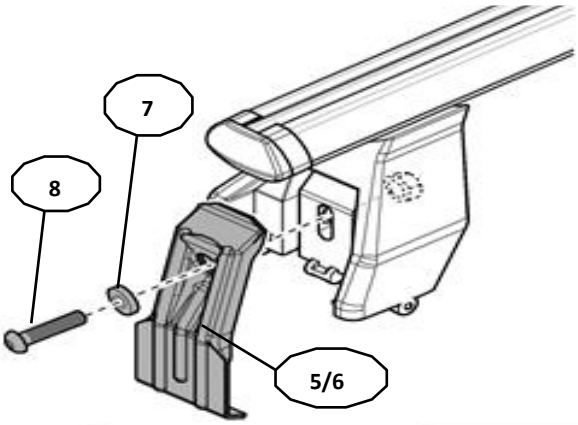

Front	Rear
5	6

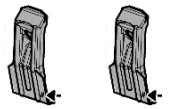

40	40
2X	2X

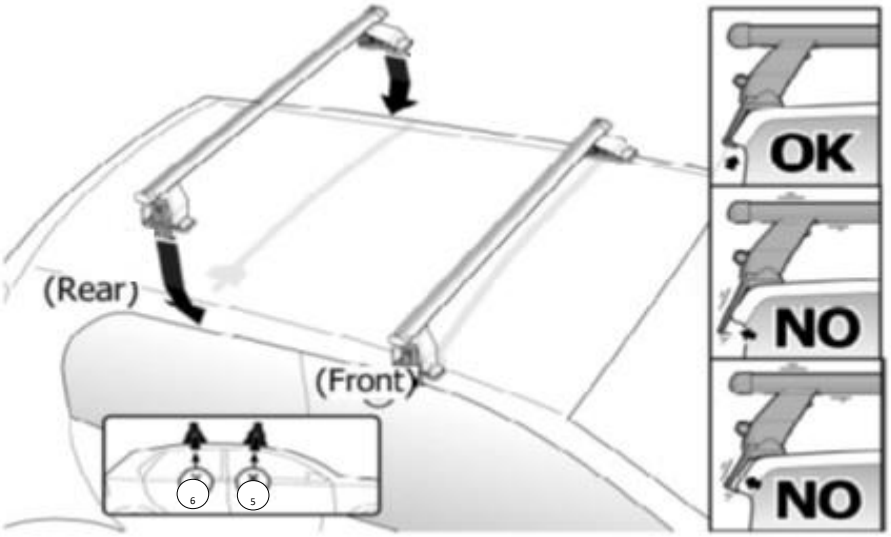

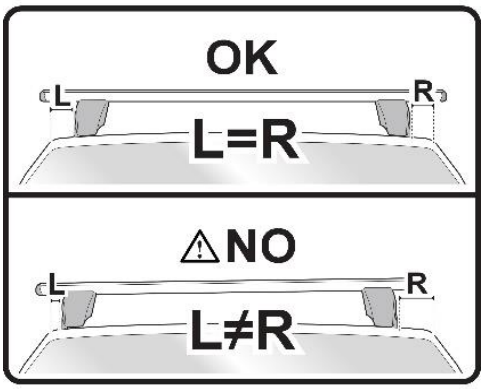

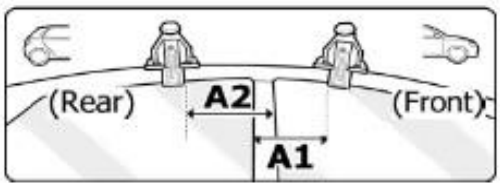

OR

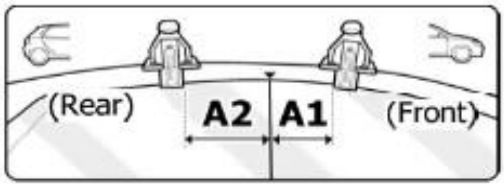

MANUFACTURER	MODEL CAR	DOORS	MODEL YEAR	A1 cm	A2 cm	A1 in	A2 in
AUDI	*A4 (B8/8K)*	*4*	*12>15*	*X*	*X*	*X*	*X*
FORD	*Escape III (C520)*	*5*	*13>19*	*15*	*55*	*5,9*	*21,7*
HONDA	*Jazz / Fit (GR)*	*5*	*20>*	*18*	*42*	*7,1*	*16,5*
LEXUS	*GS (L10)*	*4*	*11>*	*27*	*37*	*10,6*	*14,6*
SEAT	*Córdoba II*	*4*	*02>09*	*25*	*32*	*9,8*	*12,6*
SEAT	*Ibiza III*	*5*	*02>09*	*25*	*32*	*9,8*	*12,6*
SKODA	*Superb (3T)*	*4*	*08>13*	*24*	*50*	*9,4*	*19,7*
VOLKSWAGEN	*Golf V (1K)*	*5*	*03>08*	*33*	*36*	*13,0*	*14,2*
VOLKSWAGEN	*Golf VI (5K)*	*5*	*08>12*	*33*	*36*	*13,0*	*14,2*
VOLKSWAGEN	*Polo V (6R/6C)*	*5*	*09>17*	*35*	*35*	*13,8*	*13,8*
VOLKSWAGEN	*Touran I (1T)*	*5*	*03>10*	*28*	*60*	*11,0*	*23,6*
VOLKSWAGEN	*Touran I (1T)*	*5*	*10>15*	*28*	*60*	*11,0*	*23,6*

X = predisposizione originale /original arrangement

6

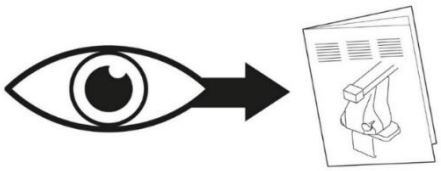

MANUAL OMEGA

NOTE:

……..

……..

……..